

CRYSTAL VIDEO

Thunder

EU Environmental Protection

Waste electrical products should not be disposed of with household waste. Please recycle where facilities exist. Check with you local authority or retailer for recycling advice.

22
PAP

2019.10.26

User Manual

This user manual applies to:

Transmitter: 7074
Receiver: 3074

User Manual V1.0

Contents

CONTENTS

About the User Manual 01

Product Features 01

Brief introduction 01

Packing List 02

Structure & Interface 03

Wireless HD Transmitter 7074 03

Wireless HD Receiver 3074 05

Product Installation 07

Wireless HD Transmitter 7074 07

Wireless HD Receiver 3074 09

Product Application 12

Functional Instructions 14

Specification 19

Precautions 20

Thank you for choosing CVW's professional wireless HD audio and video transmission product. Read the following precautions carefully before using this product:

* Do not use this product for a long time in the sun or dusty place.

* Be sure to use this product within the temperature and humidity ranges.

* Do not operate the product under vibration or strong magnetic fields.

* Do not put conductive materials in the product vents.

* Do not open the product yourself without the guidance of our professionals.

* Before power-on, make sure that the adapter input voltage is AC110V-220V, and that the output voltage and current meet the product specifications.

* Before power-on, make sure that the antenna is installed.

About This Manual

This Manual details the product specifications, instructions for use, precautions, and troubleshooting. Read the Manual carefully before using the product. If you have any questions or difficulties in using this product, contact the Company or the seller in time.

Product Features

Thunder is a wireless HD video transmission device with wall-mounted, non-line-of-sight transmission features,supporting up to 1080P/60Hz video resolution. This system is based on 1.4Ghz wireless network technology for transmission. Image processing is performed using H.264 coding-decoding technology, and thus the images are clearer and the latency is lower.

Brief Introduction

■ High-quality low-latency video footage

This product supports HD-SDI&3G-SDI input and output as well as HDMI full-HD input and output, with the highest resolution of 1080P/60Hz. With the use of H.264 coding-decoding technology with high compression ratio and high definition, the images have high definition, and the latency is as low as 70ms.

■ Wall-mounted and non-line-of-sight transmission features

This product is designed based on 1.4Ghz wireless network technology. The lower frequency makes it have better penetrating characteristics and can be transmitted under non-line-of-sight conditions, and this frequency is not easy to be interfered by the external environment.

■ Point-to-point mode and streaming mode

This product supports switching between two operating modes, namely point-to-point mode and RTSP streaming mode. In point-to-point mode, the video output interface is HDMI or SDI. In RTSP streaming mode, the video streaming interface is RJ45 network interface. There are more options for different applications.

■ RS232 transparent transmission

This product supports RS232 transparent transmission, which is convenient for users to control the transmitting terminal through the device at the receiving terminal, such as the PTZ.

Packing List

The following items are included in the product package



Transmitter
*1 pieces

鹅颈天线 *2



SDI cable*1 pieces



Double Ball Head
Arm Mount*1 pieces



Power supply
cable*1 pieces



Receiver
*1 piece

鹅颈天线 *2



SDI cable*1 pieces



Double Ball Head
Arm Mount*1 pieces



Power adapter
(12V/2A) *1 piece



Power supply
cable*1 pieces

Structure & Interface

TX: 7074

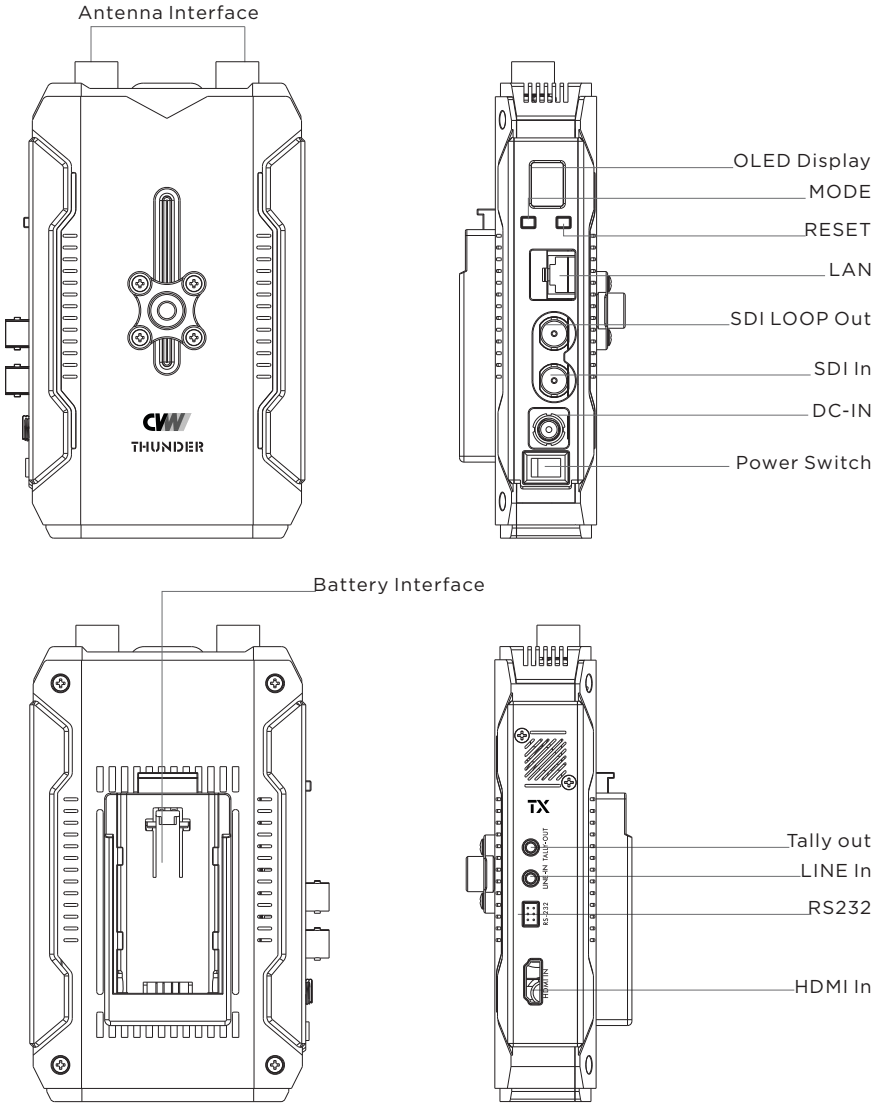

Transmitter Key Operation

Button	Operation	Description
MODE	Press and hold the “MODE”button at the TX terminal for about 6s This button does not function at the RX terminal.	When switching to streaming mode, the word “RTSP” will be displayed on the OLED display, and the product will enter streaming mode.
RESET	Press the “RESET” button for about 3s	During the restart of the coding-decoding board, the “RESET” string will always be displayed on the OLED display, and the string will disappear after the restart.

RX: 3074

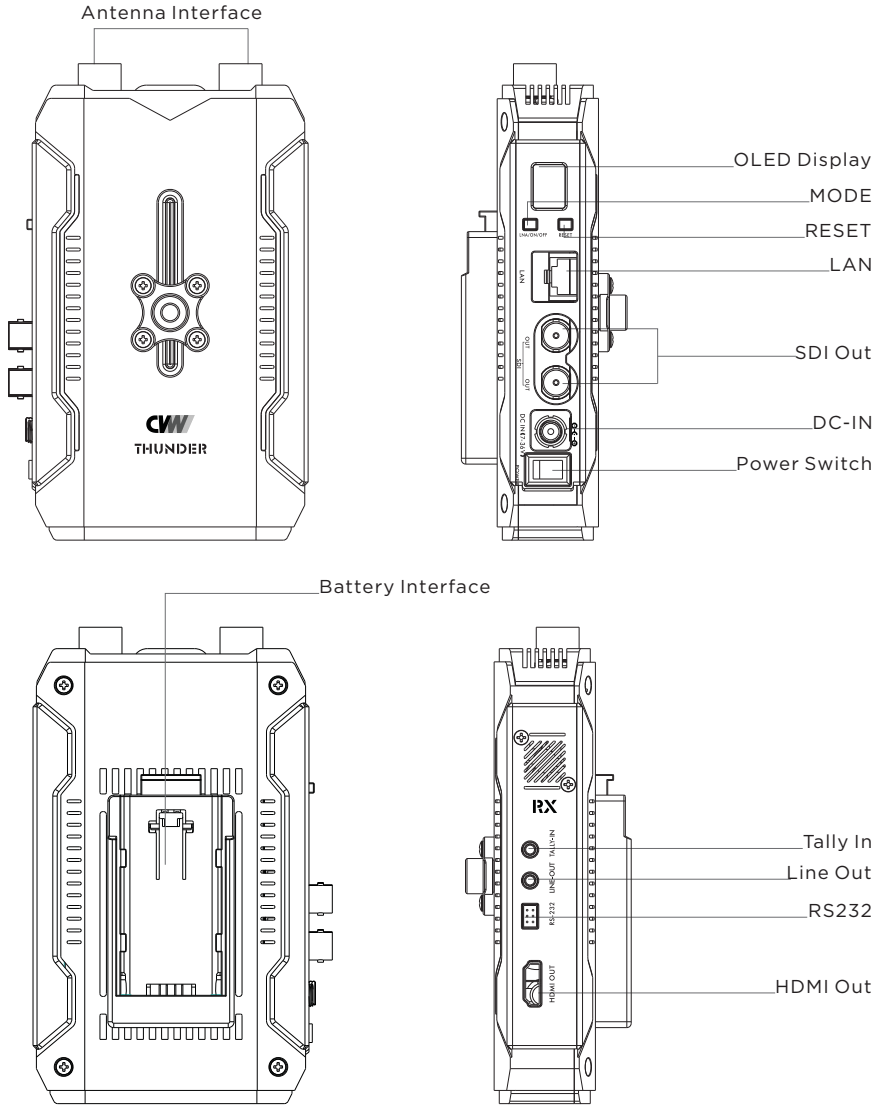

Receiver Key Operation

Button	Operation	Description
MODE	Press and hold the “MODE”button at the TX terminal for about 6s This button does not function at the RX terminal.	When switching to streaming mode, the word “RTSP” will be displayed on the OLED display, and the product will enter streaming mode.
RESET	Press the “RESET” button for about 3s	During the restart of the coding-decoding board, the “RESET” string will always be displayed on the OLED display, and the string will disappear after the restart.

Product Installation

For transmitter

1. Please install all the antennas on the transmitter (as shown in the picture).

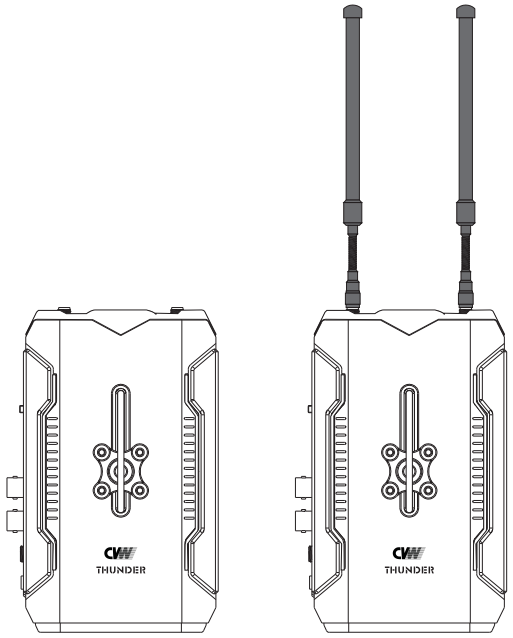

2. If using battery, equip to the transmitter. As shown in the figure below.

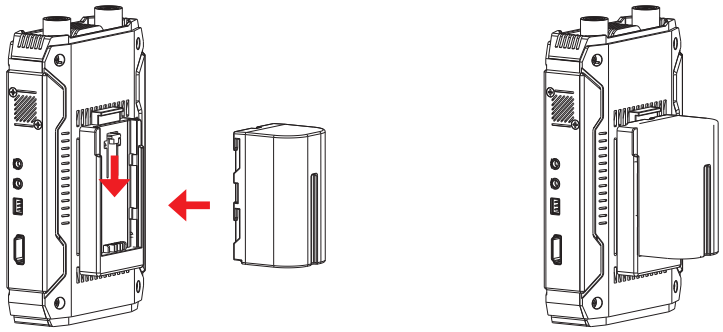

Transmitter Battery Transmitter+Battery

3. Please fix the transmitter via the screw at the bottom or the V-mount at the back, and place it at a height of around 1.5 to 2 meters above floor. (as shown in the picture).

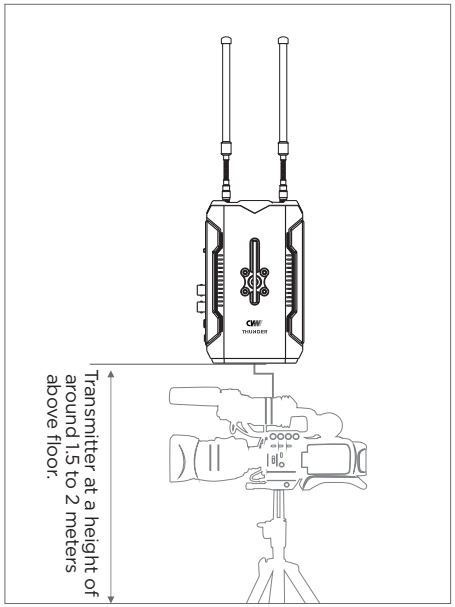

4. Please connect the transmitter and camera with SDI or HDMI cable. (as shown in the picture).

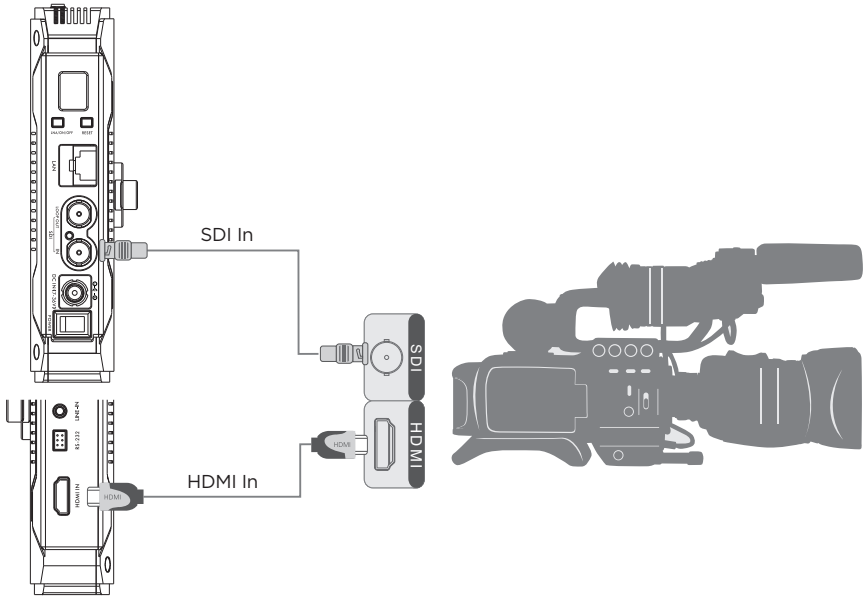

Receiver Installation

1. Please install all the antennas on the transmitter (as shown in the picture).

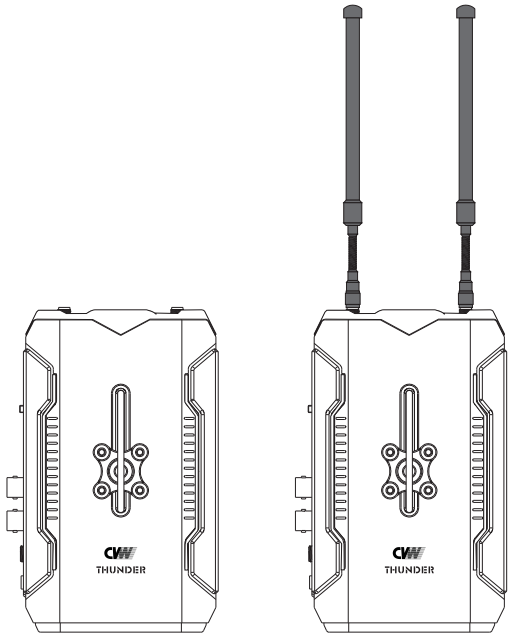

2. If using battery, equip to the receiver. As shown in the figure below.

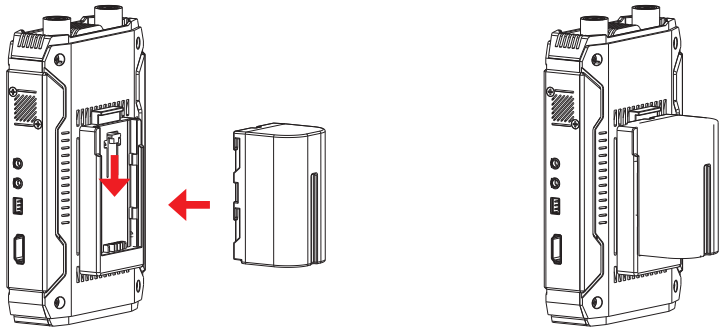

3. Please fix the transmitter via the screw at the bottom or the V-mount at the back, and place it at a height of around 1.5 to 2 meters above floor. (as shown in the picture).

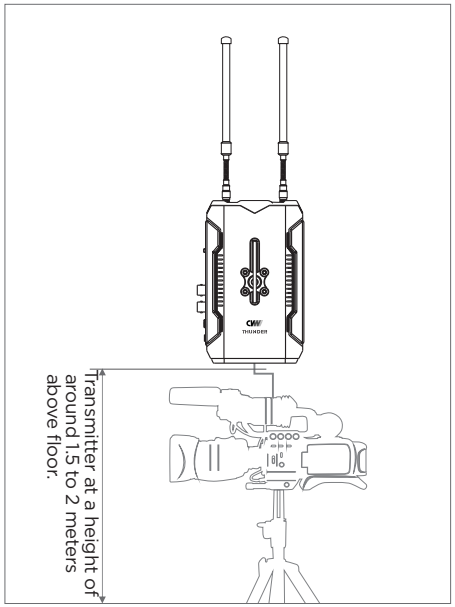

4. Please connect the transmitter and camera with SDI or HDMI cable. (as shown in the picture).

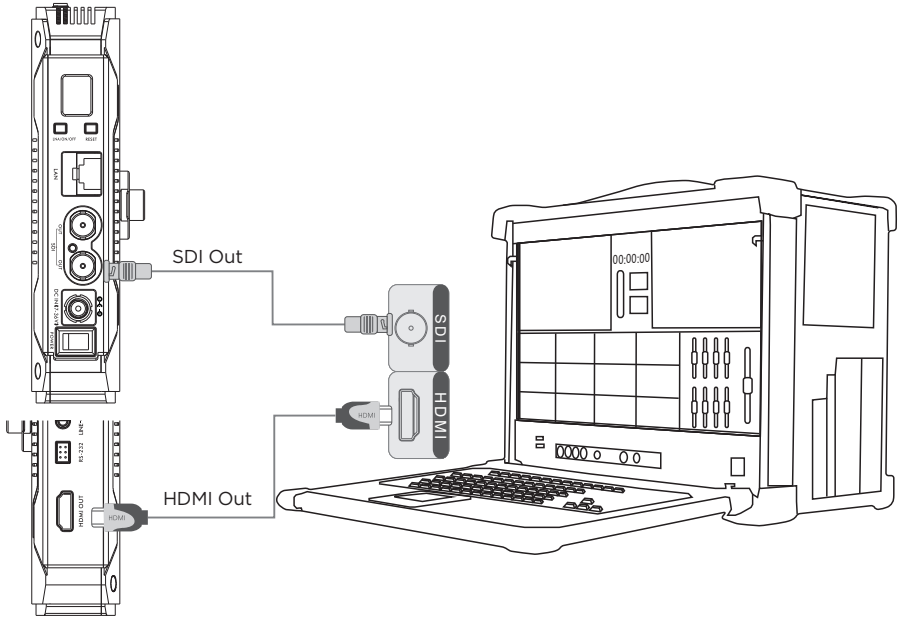

产品开机

请依次打开发射机、接收机和其它关联设备的电源开关，上电后发射机和接收机的OLED屏会点亮。发射机与接收机进行连接时，接收端连接的监视器上OSD显示“connecting to transmitter”,网络连接上后显示”Link up with transmitter. Please check video source.“，稍等片刻就能在接收机连接的显示终端观看到实时图像。从产品上电到显示实时图像预计费时1分钟。

Product Application

Point-to-point mode

In point-to-point mode, the video source is sent to the transmitter via HDMI or SDI. The receiver will receive the signal and display it to the display device via HDMI and SDI.

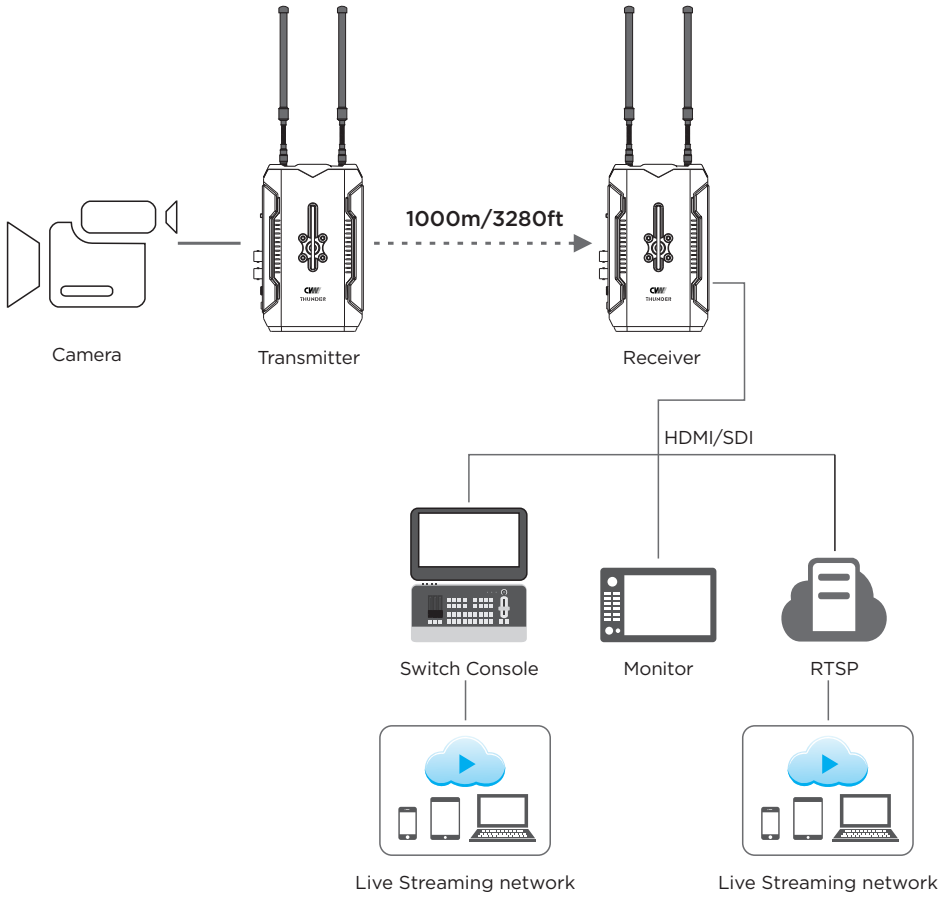

Streaming mode

In streaming mode, the video source is sent to the transmitter via HDMI or SDI. The receiver will receive the RTSP protocol network signal from the transmitter and send it to the computer for display through the network port. You can connect to the WIFI at the receiver via your mobile phone or tablet, and watch it through the player on the mobile phone or tablet.

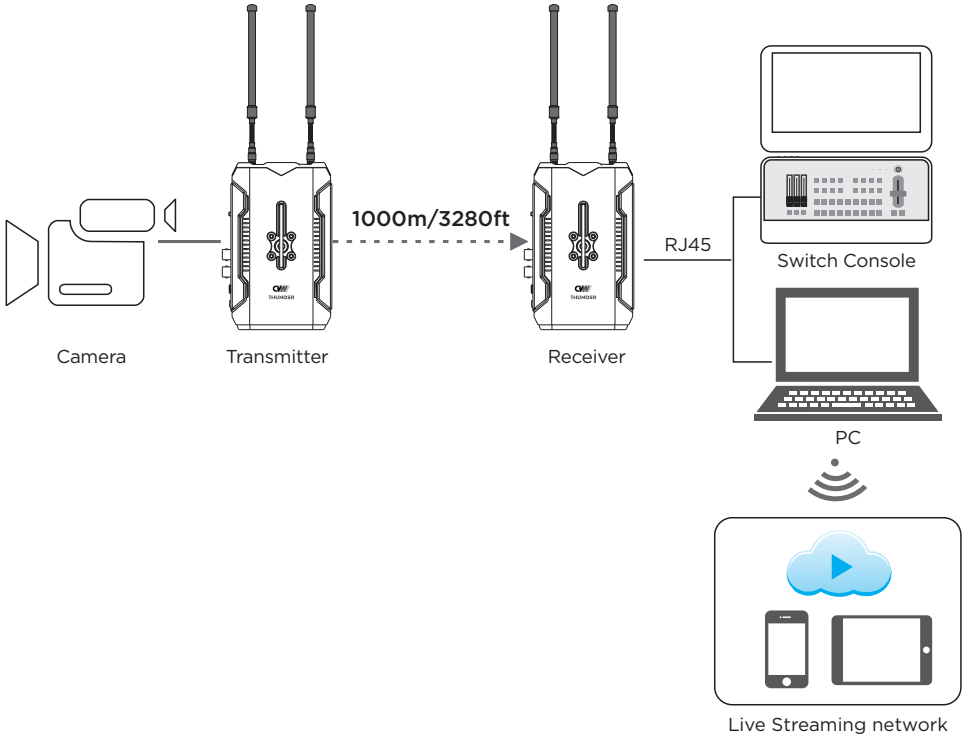

Functional Instructions

Tally function

先Tally接口为标准的ϕ3.5耳机接口，输入端低电平有效触发，输出端输出高电平驱动灯点亮。。

Tally interface of the transmitter and receiver: The transmitter's Tally interface is a standard φ3.5 headphone interface. The receiver's Tally interface is a DB9 female.

Tally light output interface:

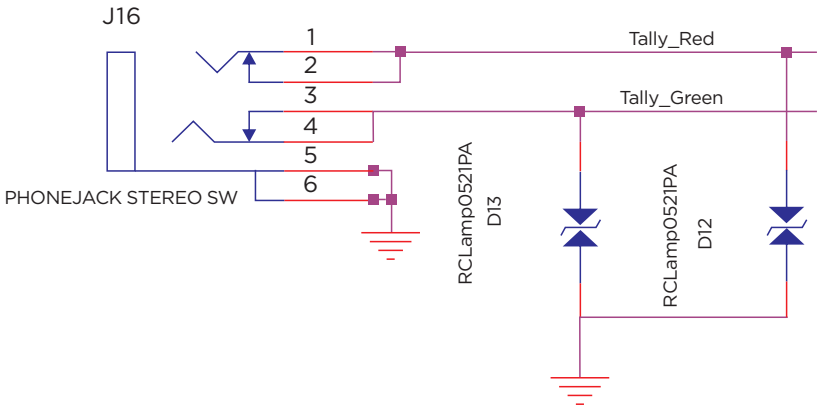

The DB9 header of the Tally input interface is defined as follows:

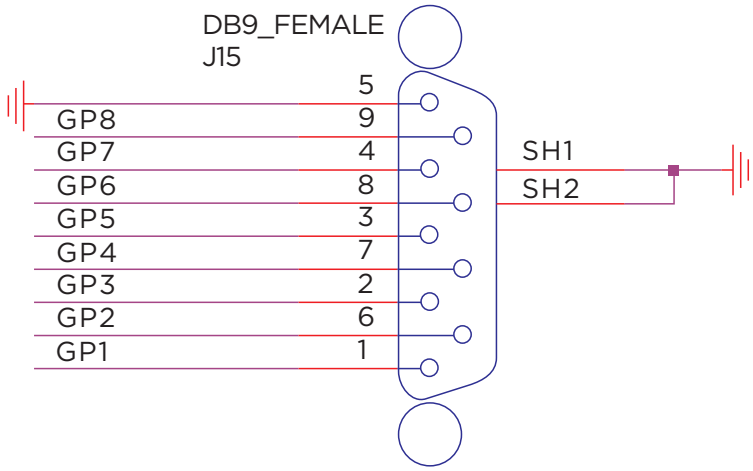

RS232/RS422 transparent transmission

Description:

This interface defaults to RS232 function. For RS422 function, contact the sales staff in advance for customized information!

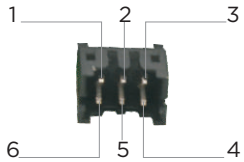

Pin No	RS232		RS422	
	Name	Description	Name	Description
1	NC	NC	RXD-	Receive data RX-
2	P12V	No voltage output by default (Reserve 12V voltage output)	P12V	No voltage output by default (Reserve 12V voltage output)
3	NC	NC	TXD-	Transmit data TX-
4	TXD	Transmit data TX	TXD+	Transmit data TX+
5	GND	Ground	GND	Ground
6	RXD	Receive data RX	RXD+	Receive data RX+

Attached: Baud rate settings

Log in to the backplane parameter settings page to change the baud rate settings: (For specific operating steps, refer to “Video Parameter Settings”)

Streaming Function

When using the functions in streaming mode, the transmitter needs to switch to streaming mode. At this time, the word “RTSP” is displayed on the transmitter’s OLED display, the SDI and HDMI at the receiver have no video output, and the image is transmitted to the streaming media software through the LAN port of the receiver for decoding display. The streaming mode depends on software decoding. Comply with lots of streaming media software. The following is an example of common VLC streaming media software:After the transmitter and receiver establish a network connection, the transmitter network indicator is always on, the receiver network connection is normal; the transmitter is connected to the HDMI or SDI video source, and the receiver’s network port is connected to the streaming device.

Take the VLC of the PC as an example. After running VLC, select to turn on the network stream.Fill in the address “rtsp://corresponding transmitter encoding board IP address/media/live/0”. Click “Play” to start streaming.

Note that the transmitter must be connected to the video source, and the IP address of the terminal streaming device (such as a computer) must be the same network segment as the IP address of the encoding board. Otherwise, the streaming will fail.

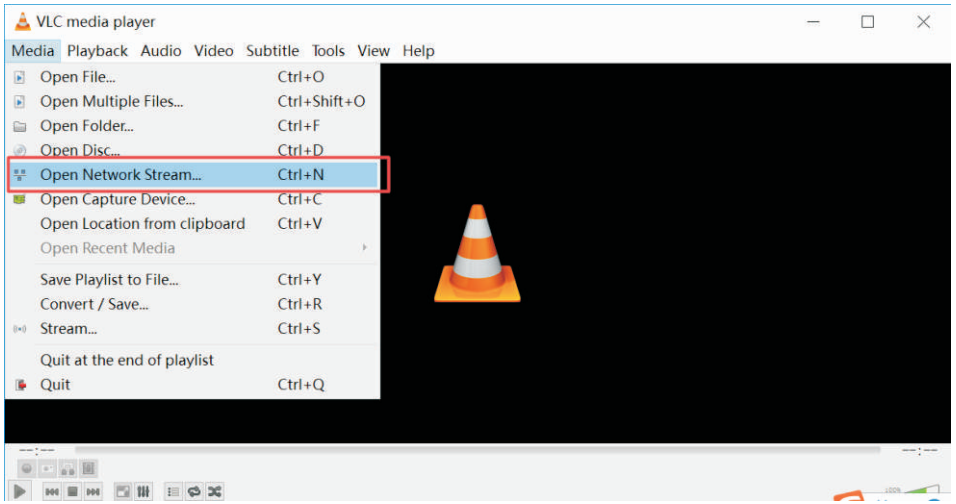

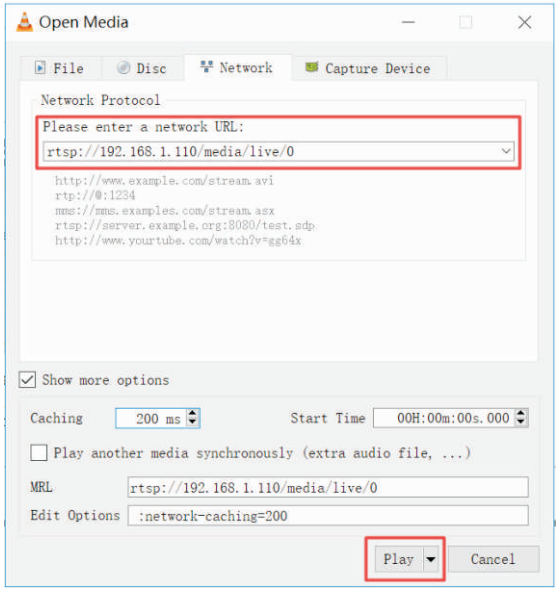

Encoder/Decoder Configuration and Upgrading

Each transmitter has one encoder, and its configuration and software upgrading need to be implemented on its encoder . Since the receiver has four decoders, the configuration and software upgrading need to be implemented on its each decoder respectively.

Keep the computer connected to the receiver through LAN port, and keep the receiver connected with all transmitters normally.

Each transmitter has one wireless transmission module and one encoder. Receiver has one wireless transmission module and four decoders. All modules and each encoder/decoder have their respective IP address as follows, and all configuration and upgrading operation must be implemented under its own IP address.

Transmitter	
Wireless transmission module IP (WiFi IP)	192.168.1.201, 192.168.1.202, 192.168.1.203, 192.168.1.204
Encoder IP	192.168.1.111, 192.168.1.112, 192.168.1.113, 192.168.1.114

Receiver	
Wireless transmission module IP (WiFi IP)	192.168.1.100
Decoder IP	192.168.1.211, 192.168.1.212, 192.168.1.213, 192.168.1.214

Open internet browser, and enter transmitter's encoder or receiver's decoder IP address in the address bar to enter the parameter settings page.

All transmitter's encoder and receiver's decoders need to be configured one by one, please refer to the following configuration case.

Transmitter Encoder Case (transmitter 2):

IP ETHADDR
192.168.1.112 → Transmitter IP address(192.168.1.111~114). Do not change the IP, otherwise the wireless connection will be shut down.

GROUP
2222 → Transmitter ID (four devices correspond to 1111, 2222, 3333 and 4444, respectively), Do not change the ID, otherwise the wireless connection will be shut down

Standard Mode Bitrate
8000 Range(1000-25000) → Transmission bitrate

RTSP Bitrate
Range(1000-15000) → RTSP streaming bitrate

SDI Audio Mode ◉ 0 ○ 1

Serial Baud Rate ○ 2400 ◉ 9600 ○ 19200 ○ 38400 ○ 57600 ○ 115200 → Serial baud rate

File Upload: 选择文件 未选择任何文件 (Select A Local File)
①

Save the configuration and then reboot...
Save Environment ②

Software upgrade: ① Select a file; ② Click Save

Receiver module: (Since the receiver has four decoders, there are four corresponding IP addresses need to be configured)

Receiver Decoder Case (Decoder 2):

Version:CM3060V3.15 → Software version

IP ETHADDR
192.168.1.212 → Decoder IP address (192.168.1.211~214)

GROUP
2222 → Corresponding transmitter ID (1111/2222/3333/4444)

LATENCY_MODE
1

Serial Baud Rate ○ 2400 ◉ 9600 ○ 19200 ○ 38400 ○ 57600 ○ 115200 → Serial baud rate

File Upload: 选择文件 未选择任何文件 (Select A Local File)
①

Save the configuration and then reboot...
Save Environment ②

Software upgrade:
① Select the file to be upgraded
② Click Save to complete the upgrade

Product Specifications

ITEM	TX:7041	RX:3041
Frequency	1427.9~1447.9MHz	
Antenna	Two antennas 1T1R+1R	
Protocol mode	TDD	
Transmission Power	33dBm	
Transmission Distance	1000M (video bitrate is 12Mbps)	
Transmission Delay	70ms(min)	
Video bitrate	1-15Mbps	
Streaming transmission protocol	RTSP	
Video Format	**SDI**: SMPTE 296M 720p50,720p59.94,720p60 SMPTE 274M 1080i50,1080i59.94,1080i60,1080p23.98,1080p24, 1080p25,1080p29.97,1080p30 SMPTE424M 1080p50,1080p59.94,1080p60 **HDMI** : 720p50,720p59.94,720p60 1080i50,1080i59.94,1080i60,1080p23.98,1080p24, 1080p25,1080p29.97,1080p30,1080p50,1080p59.94,1080p60	
Audio Format	PCM Sampling rate: 48KHz Number of bits: 16bit	
Power consumption	Approx. 12W for transmitters Approx. 7W for receivers.	
Operating voltage	7-36V	
Temperature	-10-50℃	

Precautions

1. If transmitter or/and receiver use HDMI cable:(a~f)

a. Do not plug in or pull out the HDMI cable of the transmitter and receiver during normal use.

b. Connect the transmitter to the video source and connect receiver to a monitor via HDMI and then power on the transmitter and receiver.

c. When the OSD prompts that code matching fails after trying code matching, reboot the transmitter and receiver to see whether they can be connected normally. Perform code matching again when it is still unable to be connected after restarting.

d. When there is no video source output since a blank screen appears during the receiver output after switching the video source resolution, pull out and then plug in the HDMI cable of the transmitter or receiver. If the HDMI cable cannot be recovered after removal and insertion, power off and restart the transmitter and receiver.

e. When the network cannot be connected for a long time after switching frequency channel, reboot the transmitter and receiver.

f. When the transmitter and receiver devices are connected normally, there is no output on the monitor at the receiver, or the video output is abnormal, re-plug the HDMI cable of the receiver and check whether the monitor is on standby. If it is still unable to output normally after the above operation, try to replace the display device.

2. If there is a picture jam or mosaic during use, it is generally caused by interference in the network. Therefore, try switching the network frequency channel to avoid the interference band. The frequency channel switching operation refers to the frequency channel switching operation instructions.