Ruggard®

Electronic Dry Cabinet



Model EDC-230L Shown

THANK YOU FOR CHOOSING RUGGARD

The Ruggard Electronic Dry Cabinet protects your lenses, photographic and optical equipment, mobile electronics, and other valuable accessories from excessive moisture. Using the cabinet's fast-acting TE Cooling Wafer, you can regulate the interior's relative humidity to help prevent fungus and corrosion from damaging your gear. The cabinet offers silent operation with no fan or compressor, and the unit is dripless, so there's no need for a water tray. The glass door and rubber seal provide extra protection against dust or airborne debris, keeping your gear working great for years.

OVERVIEW

Control Panel

The illuminated digital display shows the cabinet's interior humidity and temperature settings.

[F/C Set], [▲/☼]: Fahrenheit/Celsius set button, value increase/Light (on/off)

[%RH], [▼]: Relative humidity value decrease, display brightness (Bright/Dim)

[SET]: Confirm setting

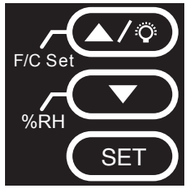

1. DC port
2. Moisture sync
3. LED bulbs
4. Front adjustable leveling feet (some models)
5. Base-foam lining
6. Contoured lens-foam lining
7. Adjustable sliding shelf
8. Shelf brackets (2)
9. Pin
10. Handle[1]
11. Adjustable shelf
12. Foam lining
13. Shelving brackets (4)
14. Combination lock
15. Fixed shelf

Note: *Features vary by model.*

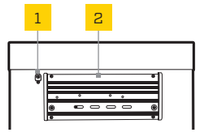

[1] *For some models, the handle is attached to the inside of the unit for shipping. Use a Phillips screwdriver to unscrew and reposition the handle on the outside of the glass. Be careful not to overtighten.*

[2] *For EDC-600L-S only. Use the power switch to turn the zones on or off.*

Sliding Shelf models

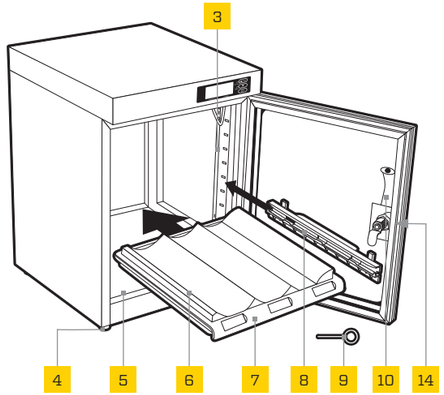

Bracket Shelf models

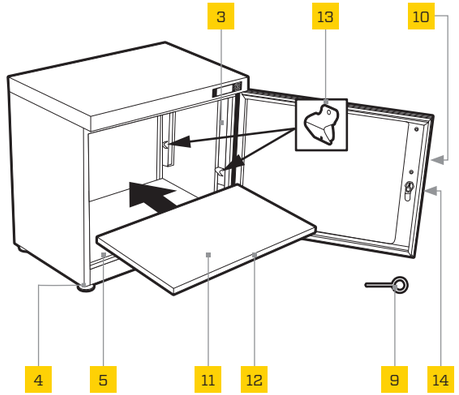

Fixed Shelf models

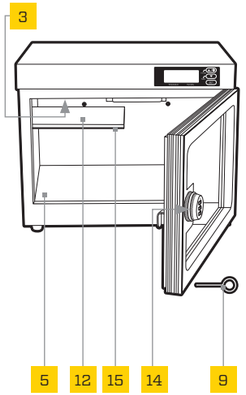

SPECIFICATIONS

	EDC-18L	EDC-30L	EDC-50L	EDC-80L	EDC-125L	EDC-180L	EDC-230L	EDC-600L / 600L-S
Volume	18 L	30 L	50 L	80 L	125 L	180 L	230 L	600 L
Power	110 to 240 V, 50/60 Hz	110 to 240 V, 50/60 Hz	110 to 240 V, 50/60 Hz	110 to 240 V, 50/60 Hz	110 to 240 V, 50/60 Hz	110 to 240 V, 50/60 Hz	110 to 240 V, 50/60 Hz	110 to 240 V, 50/60 Hz
Relative humidity	60% to 35% (±7%RH)	60% to 35% (±7%RH)	60% to 35% (±7%RH)	60% to 35% (±7%RH)	60% to 35% (±7%RH)	60% to 35% (±7%RH)	60% to 35% (±7%RH)	60% to 35% (±7%RH)
Zones	1	1	1	1	1	2	1	1 / 2[2]
Shelf load-bearing capacity	4.4 lb. (2 kg)	17.6 lb. (8 kg)	17.6 lb. (8 kg)	33 lb. (15 kg)	17.6 lb. (8 kg)	17.6 lb. (8 kg)	33 lb. (15 kg)	44.1 lb. (20 kg)
Dimensions (W × D × H)	13.8 × 10.8 × 10.6 in. (35 × 27.5 × 27 cm)	11.4 × 12.6 × 16.5 in. (29 × 32 × 42 cm)	11.4 × 12.6 × 23.8 in. (29 × 32 × 60.5 cm)	21.2 × 14.3 × 20.3 in. (53.8 × 36.2 × 51.6 cm)	16.1 × 15.4 × 35.4 in. (41 × 39 × 90 cm)	15 × 15.4 × 53 in. (38 × 39 × 134.5 cm)	23.6 × 19 × 33.5 in. (60 × 48.2 × 85.2 cm)	33.5 ×16.9 × 72 in. (85.1 × 43 × 183 cm)
Weight	8.4 lb. (3.8 kg)	14.3 lb. (6.5 kg)	20 lb. (9.1 kg)	29.5 lb. (13.4 kg)	42.3 lb. (19.2 kg)	58.4 lb. (26.5 kg)	60.6 lb. (27.5 kg)	158.7 lb. (72 kg)
Size comparison								

USING THE COMBINATION LOCK

The cabinet comes with the default combination set to 000.



1. With the door closed, select the default combination, and turn the lock counterclockwise to unlock it.
2. To change the combination, insert the pin and lightly press it into the hole with one hand. Set the combination to the numbers of your choice with the other hand, and then remove the pin.
3. Turn the lock clockwise and scramble the numbers to lock the door.



Important: *Keep a record of your combination and keep it in a safe and accessible place.*

PRECAUTIONS

- Do not place any corrosive or flammable materials inside the cabinet.
- Keep this product away from direct sunlight, high temperatures, and windy environments.
- When storing food, medicine, or chemicals, make sure they are stored in a separate and sealed container.
- The weight limit for each shelf is 40 pounds (18.1 kg). Do not overload the shelves.
- This product is for indoor use only.
- All images are for illustrative purposes only.

SETTING AND CHECKING HUMIDITY

The relative humidity setting regulates the entire cabinet interior. You can set the relative humidity percentage from 25% to 60%*, and it adjusts fully within 1 to 3 hours. The inside humidity can be decreased, but you cannot increase the humidity more than the surrounding environment. Keep the door closed to ensure optimal humidity levels.

1. Press the [Set] button twice until the humidity display (blue) begins to flash.

2. Use the [▲] and [▼] buttons to set the desired relative humidity value.

3. Press the [Set] button to confirm the settings.

Verify the target humidity by pressing the [%RH] button. The display will show the target value for two seconds before returning to the actual humidity level reading.

**The Electronic Dry Cabinet functions only within 25% to 60% relative humidity, even if you set the value outside that range.*

Note: *Do not place the rear of the cabinet directly against a wall or other surface. This may reduce the operational efficiency. Keep the door closed to prevent the humidity from increasing inside the cabinet.*

SETTING THE BRIGHTNESS AND TEMPERATURE DISPLAY

Press and hold the [▼] button for three seconds to switch between the Bright or Dim display mode.

When the unit is initially turned on, the displayed temperature will be in degrees Celsius.

Press and hold the [F/C Set] button for three seconds to change to Fahrenheit and vice versa.

Note: *This unit does not control temperature.*

OPTIMAL RELATIVE HUMIDITY (RH) LEVELS

Relative Humidity (RH) Level	Recommended Items
50%–60%	Books, antique documents, paper (fax, copy, print)
40%–50%	Camcorders, cameras, lenses, telescopes, microscopes, endoscopes, compact discs, film negatives, film transparency/slides, microfilm, disk drives, audio and video tapes
35%–40%	Metal and metal powder products, electrical equipment, semiconductors, capacitors, printed circuit boards, IC, batteries and other electronic equipment, precision measuring tools, spectrometers, optics, lenses
25%–30%	Pharmaceutical raw materials, spices, powder coating, adhesives, seeds, pollen, dry flour

FIVE-YEAR LIMITED WARRANTY

This Ruggard product is warranted to the original purchaser to be free from defects in materials and workmanship under normal consumer use for a period of five (5) years from the original purchase date or thirty (30) days after replacement, whichever occurs later. The warranty provider's responsibility with respect to this limited warranty shall be limited solely to repair or replacement, at the provider's discretion, of any product that fails during normal use of this product in its intended manner and in its intended environment. Inoperability of the product or part(s) shall be determined by the warranty provider. If the product has been discontinued, the warranty provider reserves the right to replace it with a model of equivalent quality and function.

This warranty does not cover damage or defect caused by misuse, neglect, accident, alteration, abuse, improper installation or maintenance. EXCEPT AS PROVIDED HEREIN, THE WARRANTY PROVIDER MAKES NEITHER ANY EXPRESS WARRANTIES NOR ANY IMPLIED WARRANTIES, INCLUDING BUT NOT LIMITED TO ANY IMPLIED WARRANTY OF MERCHANTABILITY OR FITNESS FOR A PARTICULAR PURPOSE. This warranty provides you with specific legal rights, and you may also have additional rights that vary from state to state.

To obtain warranty coverage, contact the Ruggard Customer Service Department to obtain a return merchandise authorization ("RMA") number, and return the defective product to Ruggard along with the RMA number and proof of purchase. Shipment of the defective product is at the purchaser's own risk and expense.

For more information or to arrange service, visit www.ruggard.com or call Customer Service at 212-594-2353.

Product warranty provided by the Gradus Group.
www.gradusgroup.com

Ruggard is a registered trademark of the Gradus Group.
© 2022 Gradus Group LLC. All Rights Reserved.

RUGGARD®
A Gradus Group Brand