Introduction to P127

P851-B



SPECIFICATION

Overall Length: 206 mm / 8.11”
Blade Length: 89 mm / 3.50”
Blade Thickness: 3.5 mm / 0.14"
Weight: 160 g / 5.64"
Blade: 14C28N stainless steel (58~60HRC), brushed
Handle: G10 w/ 420 stainless steel liner
Locking: Liner lock w/ “Thumb-Up” safety lock
Bearing: Roller bearing washer

DESCRIPTION

A strong tanto blade featuring sufficient blade thickness and properly recurved long edge shows great ability both in piercing and slicing. For added dependability in outdoor or tactical uses, the P852B is secured with Thumb Up safety lock to be more reliable in protecting users, and additionally more powerful in handling difficult situations.

FEATURES

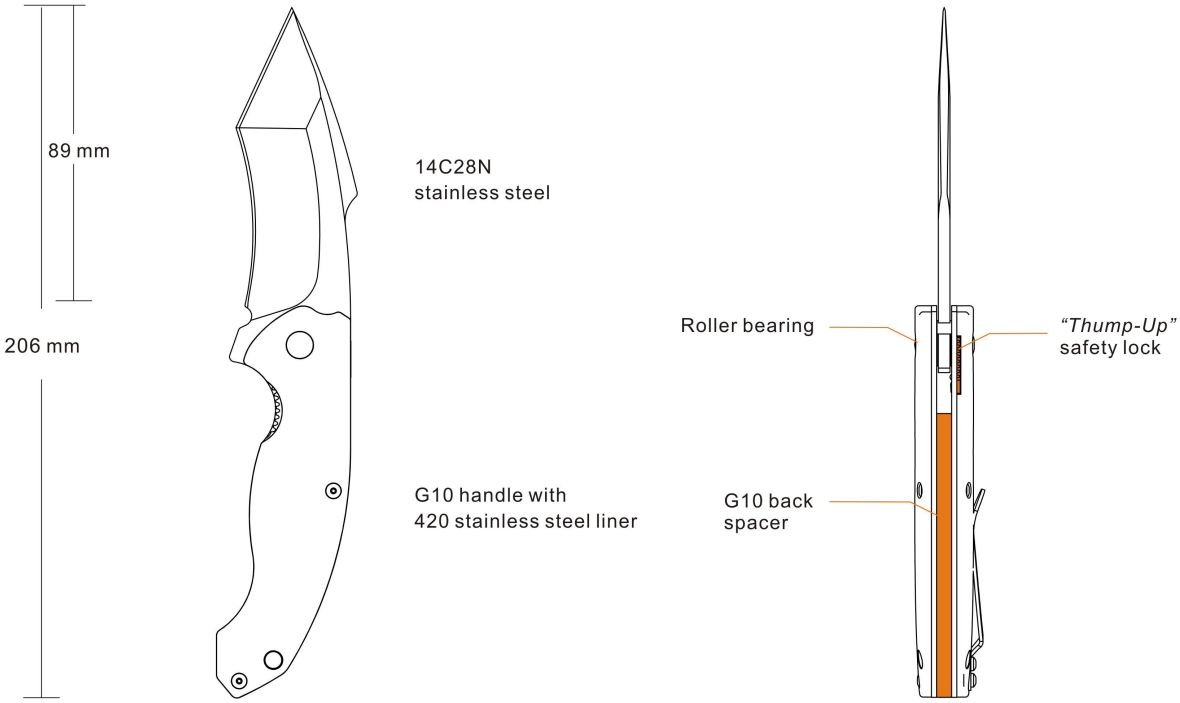

Sandvik 14C28N Stainless Steel, Cryogenic Treatment

Sandvik 14C28N is a martensitic stainless chromium steel with a chemistry optimized for high quality professional knife applications which put very high demands on edge sharpness, edge stability and corrosion resistance. As to this knife, the 14C28N is intensively processed by RUIKE using quenching and cryogenic treatment, which features an ideal hardness of 58~60 HRC.

G10 Knife Handle

RUIKE knife handles are a blend of fiberglass and resin, giving the knives the ability to withstand intense forces, preventing scrapes and general abrasion.

"Thumb Up" safety lock

1) Avoids accidental blade closure;
2) Installed at the back of the handle, this safety lock allows quick turning on/off by thumb-up/thumb-down movement;
3) Patented, proprietary technology.

Roller Bearing washer

The pivot that connects the blade and handle is a roller bearing structure, which ensures that deploying the blade is a safe, quick and smooth action.